NOTES:

ATTIC SMOKE COMPARTMENT:

DENOTES SMOKE COMPARTMENT

INDICATES LOCATION OF ATTIC FIRESTOP, 5/8" "X" GYP. SHEATHING APPLIED OVER ONE SIDE OF TRUSS OR ROOF RAFTER FROM CEILING LINE TO TIGHT TO ROOF DECK - EXTEND THRU OVERHANGS TO FASCIAS

ROOF TRUSS DESIGN LOADS AND NOTES

GENERAL TRUSS NOTES:

1. USE TRUSS TIE DOWN CLIPS AT ALL BEARING POINTS WITH SIMPSON H 2.5
2. ALL TRUSSES SHALL BE SIMPLE SPAN.
3. COMPLY WITH ALL STATE AND LOCAL REQUIREMENTS FOR SNOW DRIFT BUILD UP LOADING WHERE APPLICABLE.
4. PROVIDE GABLE TRUSS AT EACH END OF GAYHEADBACK IN ADDITION TO TRUSSES SHOWN

ROOF TRUSS DESIGN LOADS:

1. ALL TRUSSES SHALL BE DESIGNED FOR A MINIMUM OF 50 PSF LIVE LOAD PLUS 25 PSF DEAD LOAD (15 PSF TOP CHORD 10 PSF BOTTOM CHORD).
2. ALL TRUSSES SHALL BE DESIGNED FOR A MINIMUM UPLIFT OF 20 PSF OVER INTERIOR SPACES AND 30 PSF AT EXTERIOR CANOPIES AND SOFFITS (MINUS 5 PSF TOTAL DEAD LOAD).
3. OTHER LIVE LOADS SHOWN ON THESE DRAWINGS ARE IN ADDITION TO THOSE LISTED ABOVE
3. OTHER LIVE LOADS SHOWN ON THESE DRAWINGS ARE IN ADDITION TO THOSE LISTED ABOVE
4. LIMIT LIVE LOAD DEFLECTION TO L/240.
5. CHECK VERTICALLY PROJECTING ELEMENTS FOR 20 PSF WIND LOAD.
6. USE "SIMPSON" H-5 - ONE @ EACH BEARING POINT OF ALL TRUSSES (TYP.)

ROOF TRUSS BRACINGS NOTES:

1. ALL BRACINGS SHOWN OR DESCRIBED SHALL BE MINIMUM 2x4 WITH 2 - 16d NAILS IN EVERY TRUSS IT CROSSES.
2. ALL TRUSS TOP CHORDS SHALL BE CONTINUOUSLY BRACED BY THE ROOF DECKING.
3. ALL TRUSS WEB MEMBERS SHALL BE BRACED AT 4'-0" OC UNLESS CALCULATIONS SHOW OTHERWISE.
4. ALL HORIZONTAL BRACINGS SHALL BE STIFFENED AT 20'-0" OC WITH EITHER:
   - A. DIAGONAL BRACING EXTENDED TO A SHEAR WALL PARALLEL TO THE ORIGINAL BRACING. SEE BRACING DETAILS A AND B.
   - B. A 1/2" PLYWOOD SHEET EXTENDED TO THE ROOF DECK OR SHEAR WALL.
5. ALL TRUSS BOTTOM CHORDS SHALL BE BRACED AT 6'-0" OC UNLESS CALCULATIONS SHOW OTHERWISE. CONTINUOUS SHEETING APPLIED TO THE BOTTOM CHORD WILL SATISFY THIS BRACING REQUIREMENT (SEE DETAIL C)

TRUSS SHOP DRAWING NOTES:

WOOD TRUSS SHOP DRAWINGS SHALL SHOW THE FOLLOWING INFORMATION:

1. INFORMATION WHICH THE RESPONSIBLE BUILDING DESIGN PROFESSIONAL WILL CHECK FOR COMPLIANCE WITH CONTRACT DOCUMENTS:
   - A. ERECTION PLAN. SHOWING DIMENSIONED LOCATION AND TRUSS IDENTIFICATION.
   - B. BEARING DETAILS. SHOWING BEARING LENGTH, WIDTH, AND DEPTH INDICATING CONFORMANCE WITH DESIGN CALCULATIONS.
   - C. DESIGN LOADS. ALL DEAD AND LIVE LOADS SHALL BE SHOWN ON THE FRAMING PLAN OR TRUSS ELEVATION INDICATING CONFORMANCE TO TRUSS CALCULATIONS.
   - D. ALL PERMANENT BRACING. SHOW TOP CHORD, BOTTOM CHORD, AND WEB MEMBER BRACING ON FRAMING PLAN AND TRUSS ELEVATION. SUPPLIER AND INSTALLER OF THE BRACING SHALL ALSO BE INDICATED.
   - E. TRUSS DIMENSIONS. SHOW DEPTH, SPAN BEARING, HEIGHTS AND SLOPES AT ALL CRITICAL POINTS.
2. INFORMATION WHICH SHALL BE THE RESPONSIBILITY OF THE TRUSS FABRICATOR AND TRUSS DESIGNER AND SHALL BE PROVIDED WITH THE SHOP DRAWING SUBMITTAL:
   - A. MEMBER DESIGN. INCLUDING WEB CONFIGURATION, MEMBER SIZE, GRADE OF LUMBER, FABRICATED SPLICES AND MEMBER BRACING REQUIRED BY TRUSS DESIGN.
   - B. INTERIOR CONNECTION. DESIGN AND SHOW DETAIL OF WEB AND CHORD CONNECTIONS, CONNECTOR PLATES AND PLATE CAPACITIES.
   - C. ERECTION PLAN. SHOWING SPACING AND LAYOUT OF ANY TEMPORARY BRACING REQUIRED FOR ERECTION.
   - D. STRUCTURAL DESIGN OF TRUSSES. SUBMITS SETS OR COMPLETE TRUSS CALCULATIONS STAMPED AND SIGNED BY A REGISTERED WISCONSIN ENGINEER FOR SUBMITTAL TO OBTAIN ALL APPROVALS FOR CONFORMANCE WITH WISCONSIN'S BUILDING CODES.
   - E. CONTRACTOR: FURNISH INSTALLER WITH ALL DATA AND INFORMATION NECESSARY FOR PROPER INSTALLATION.

WIND SHEAR WALL NOTES

EXTERIOR WALLS
ANCHOR 7/16" OSB. SHEATHING WITH MIN. 8 d NAILS SPACE @ 4" O.C. @ PANEL EDGES & 12" O.C. IN FIELD.

INTERIOR WALLS - WHERE INDICATED ON PLANS FASTEN DRYWALL W/ MIN. 6d. COOLER NAILS AT 4" O.C.

NOTE THAT SHEAR WALLS EXTEND FROM TOP OF CONC. SLAB TO BOTTOM OF ROOF TRUSSES

ANCHOR BOTTOM PLATE TO CONC. SLAB OR WALL (1ST LEVEL) W/ 1/2" @ EXP. BOLTS @ 48" O.C.

— — — INDICATION FOR INTERIOR SHEAR WALL

LVL (HEADERS/BEAMS) Fb = 2800 PSI
Fv = 290 PSI

D.M. LUMBER- JOISTS: Fb = 1000 PSI
Fv = 95 PSI
STUDS: Fb = 875 PSI
Fv = 70 PSI

HEADER SCHEDULE		
HEADER	SIZE / TYPE	BEARING STUDS
H-1	(2) 2x10's	(2) 2x6's
H-2	(2) 2x10's PRESSURE TRTD.	(2) 2x6's MIN.
H-3	(3) 2x10's	(2) 2x6's MIN.
H-4	(2) 9 1/2" LVL's	(3) 2x4's MIN.
H-5	(3) 9 1/2" LVL's	(4) 2x4's MIN.
H-6	(4) 9 1/2" LVL's	(4) 2x4's MIN.

*TYPICAL @ ALL HEADERS; PROVIDE SOLID SUPPORT FULL WIDTH OF BEARINGS

USE H1 HEADERS AT MISC. WALL OPENINGS NOT NOTED ELSEWHERE

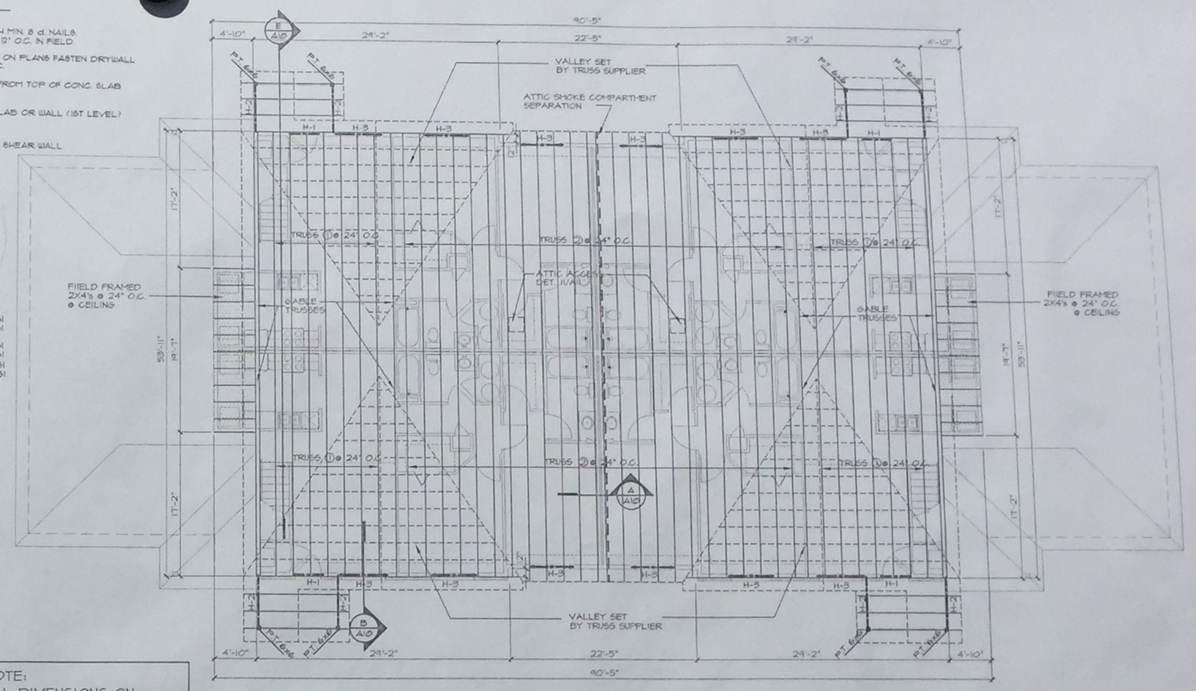

NOTE:
ALL DIMENSIONS ON FRAMING PLANS ARE STUD FACE TO STUD FACE

HIGH ROOF FRAMING PLAN - BUILDING 'B'

1/8" = 1'-0"

TRUSS PROFILES

1/8" = 1'-0"

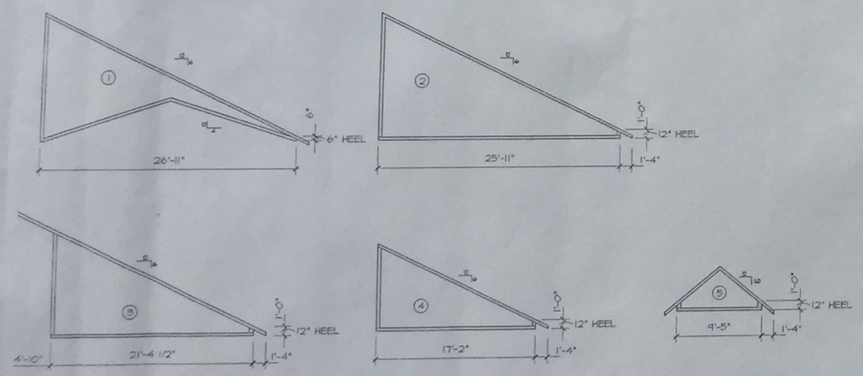

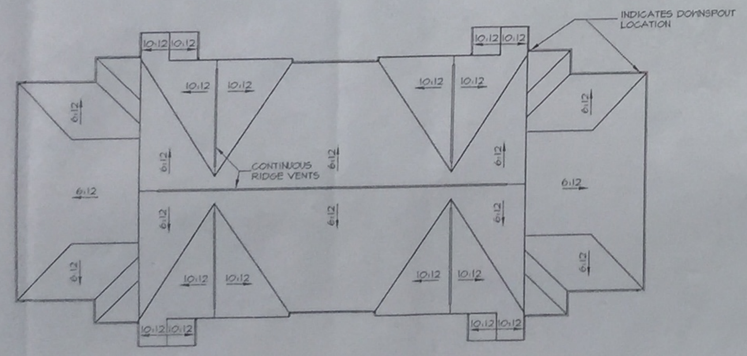

ROOF PLAN

1/16" = 1'-0"

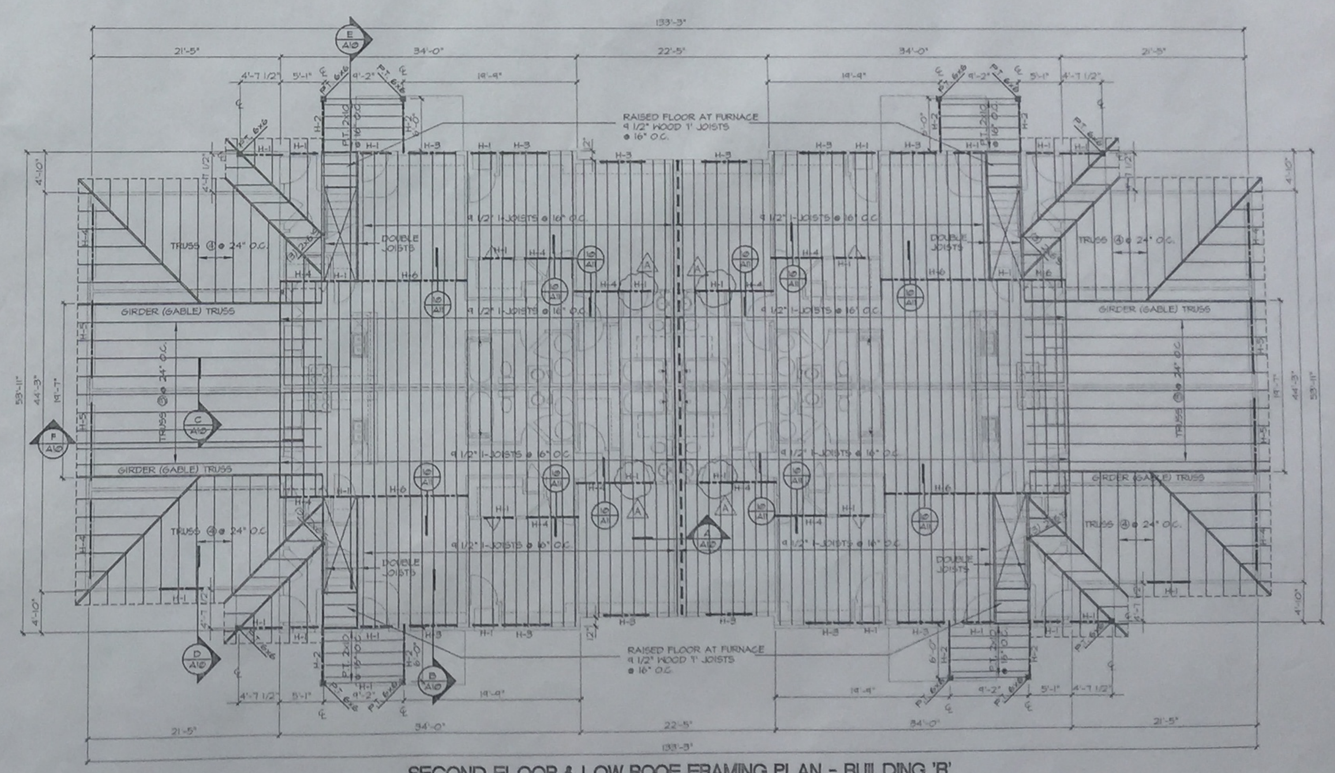

SECOND FLOOR & LOW ROOF FRAMING PLAN - BUILDING 'B'

1/8" = 1'-0"

GARY BRINK & ASSOCIATES
ARCHITECTS

6506 SCHROEDER ROAD
MADISON, WI 53711
608-273-9636
608-273-3757 (FAX)

PROJECT:
SUNSET DRIVE APARTMENTS
SUNSET DRIVE
MILTON, WISCONSIN

CLIENT:
MIRKWOOD DEVELOPMENT, INC.
1507 NEWPORT AVENUE JANESVILLE, WISCONSIN 53545

©1998 GARY BRINK & ASSOC.

Any duplication, reproduction, or use by any other party is prohibited unless prior written authorization is received from GARY BRINK & ASSOC.

PROJECT:	9746
CAD\FILE:	A4-9746
DRAWN BY:	TB
DATE:	05/26/98
REV. A	06/10/98

A4